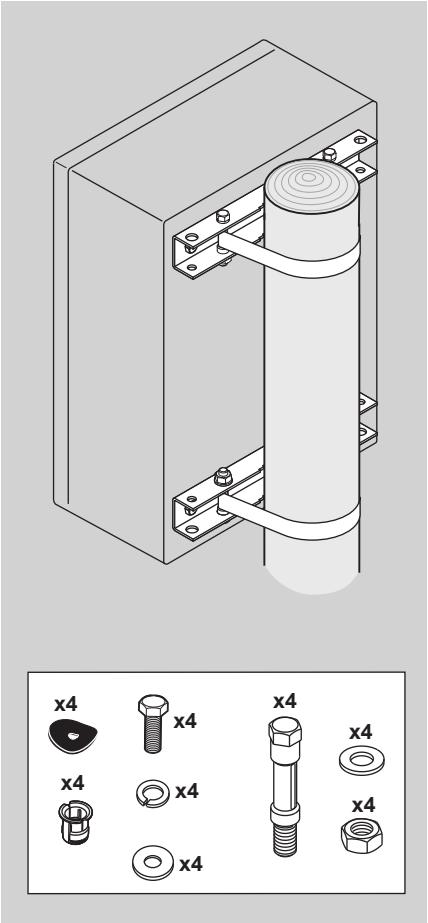

Turtle Engineering Ltd Post Mount Kit for Defibrillator Cabinets

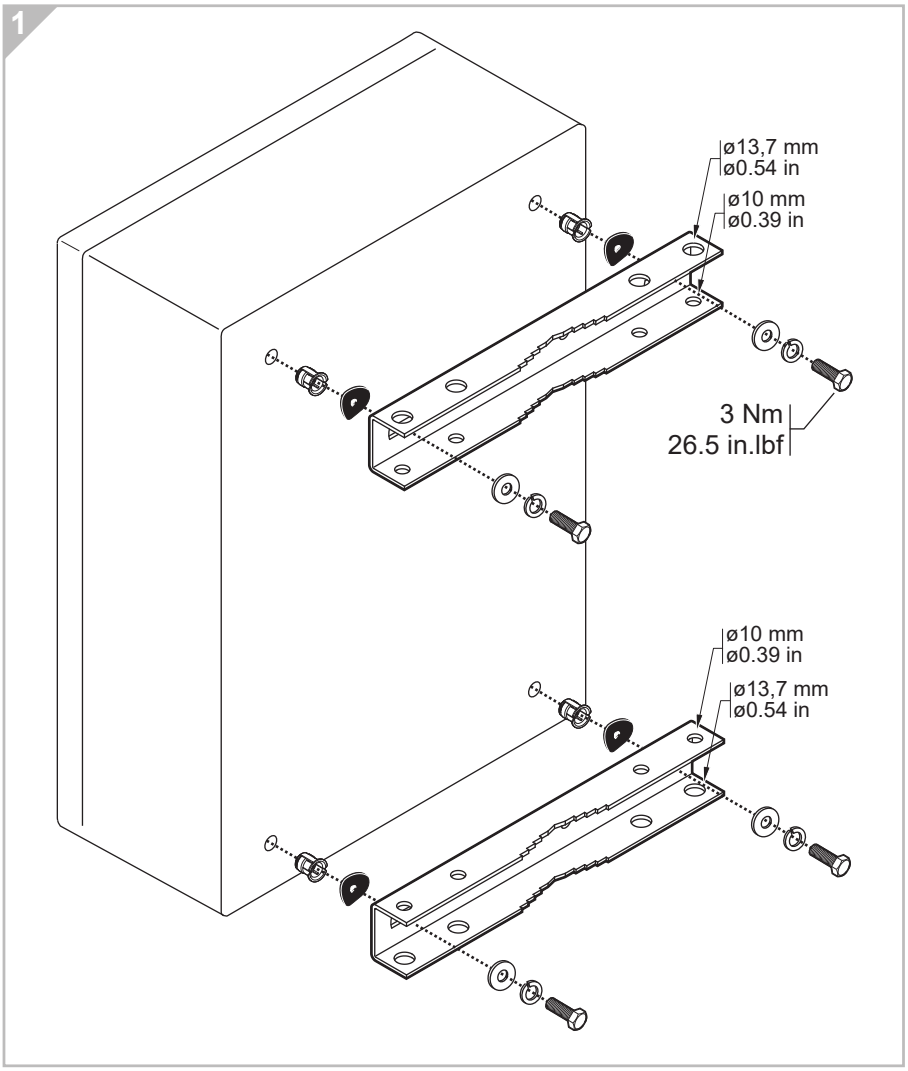

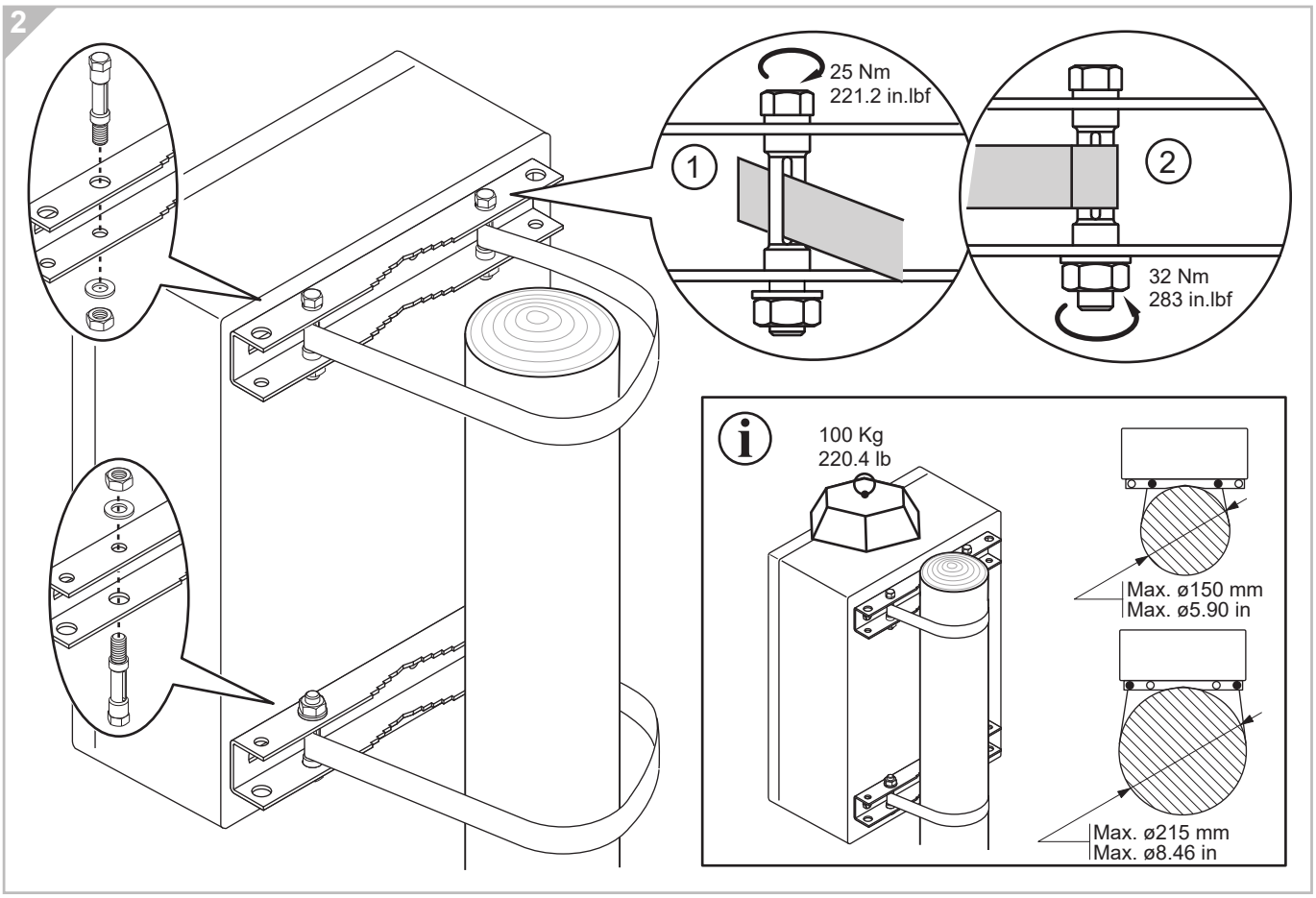

NVE3226901-00